THIS DOCUMENT IS TRUE AND CORRECT AT TIME OF PUBLICATION. CONTINUED PRODUCT IMPROVEMENTS MAKE SPECIFICATIONS AND MEASUREMENTS SUBJECT TO CHANGE WITHOUT NOTICE.

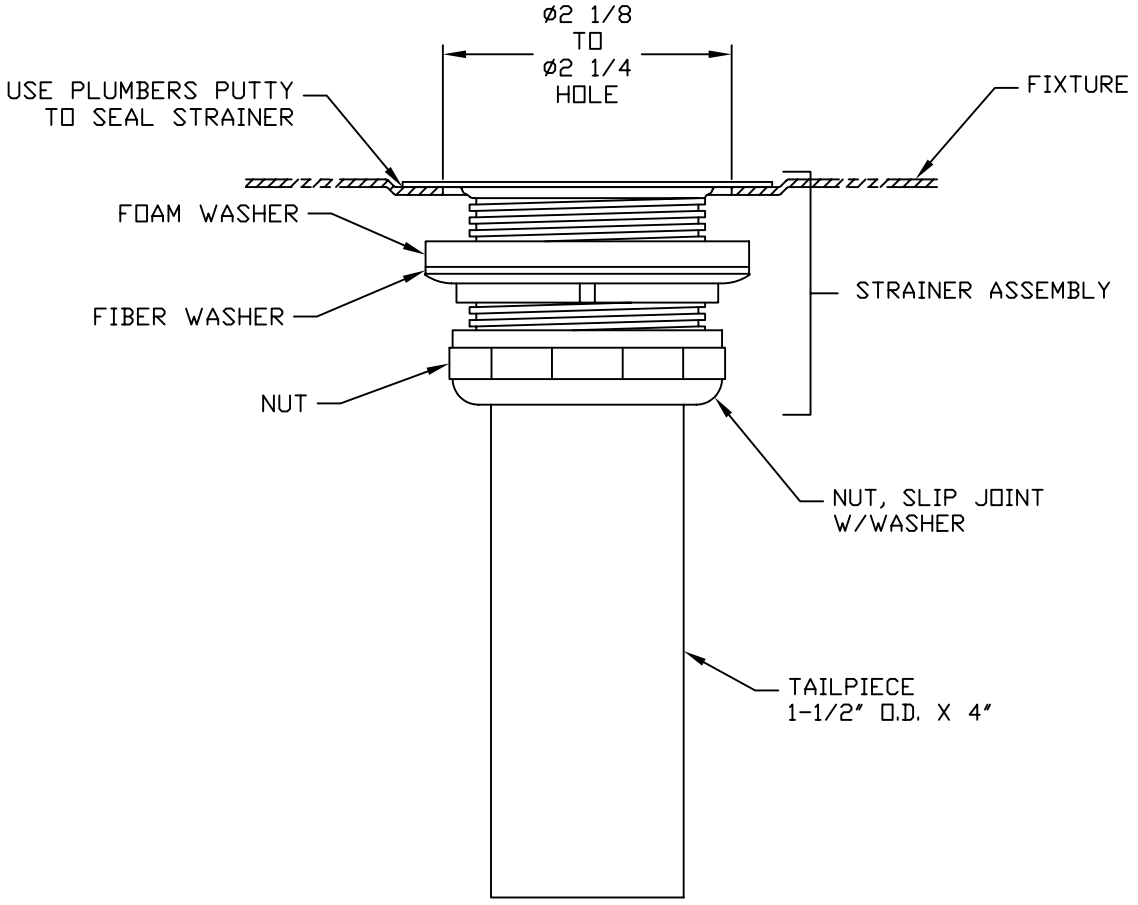

MODEL 6458

DWG. NO. 14637C00

INFO FAX : 1-888-FAX-HAWS (1-888-329-4297)
1455 Kleppe Ln, Sparks NV, 89431
Phone: 775-359-4712 Fax: 775-359-7424
Haws Ag Bachweg 3 CH-3401 Burgdorf Switzerland
Haws Mfg Pte Ltd 74 Sungei Kadut Loop Singapore 729531
e-mail: Haws@hawsco.com website: www.hawsco.com

REVISED PER ECN: 3264	BY: MD	APVD:	TITLE: WASTE STRAINER	PART NUMBER: 0002077678
DRAWN: J FIGUEROA	3/29/00		MODEL: 6458	DRAWING NUMBER: 14637C00 — REV. 1
APPROVED:			INFO FAX DOC #: 26458	
			SCALE: 1:1 — DRAWING TYPE: INSTALLATION/FAXBACK	SIZE: A — SHT. 1 OF 1